CNC Procedure 2016_029

Sep 24th

2016

Procedure for handling iS Series Controller used in RS (FS180iMA)

[Applicable for all Models of ROBOSHOT α-xxxiA]

Maintenance of LCD unit of iS Series CNC
Unit Specification → A13B-0191-C012 (Special for Roboshot)
Main PCB Board A20B-8100-0600 (Only for Roboshot)

PC Engine Card A15L-0001-0069#16CJ (With All 4 FFC cable Contacts were damaged in condition)

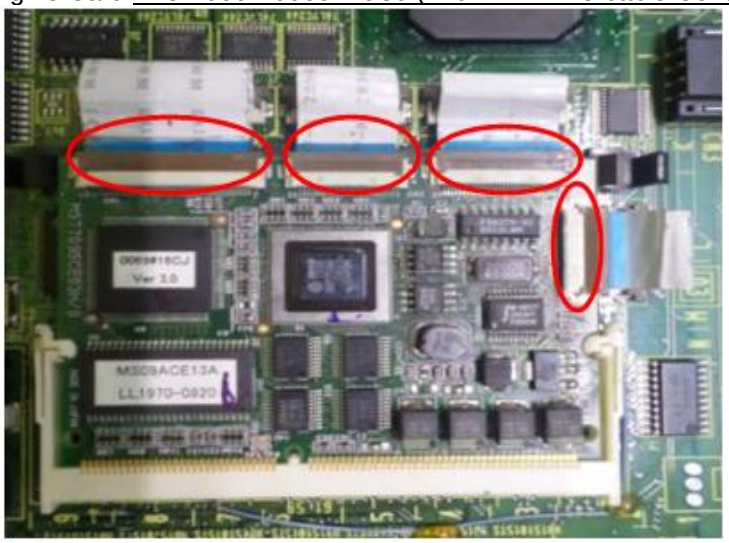

LIST OF THE PCBS, UNITS, MAINTENANCE SUPPLIES AND TOOLS

1.1. List of PCB's:

Name	Specification	
Main board	---------	A20B-8100-0603
	for ROBOSHOT	A20B-8100-0600
Inverter PCB	for 10.4" LCD type	A20B-8001-0920
Backup unit PCB	A20B-2100-0510	

1.2. List of units:

Name				Specification
		Soft Key	Touch Panel	
Basic unit	10.4" LCD Type	O	X	A13B-0191-C045
		X	O	A13B-0191-C046
		O	O	A13B-0191-C047
	for ROBOSHOT			A13B-0191-C012
Card Engine	Japanese version			A13B-0191-H041
	English version			A13B-0191-H042
	for ROBOSHOT			A13B-0191-H011
Compact Flash Card	16MB			A13B-0191-H021
	32MB			A13B-0191-H022
	48MB			A13B-0191-H023
	64MB			A13B-0191-H024
Backup unit				A02B-0269-H051
Cable for Backup unit				A02B-0269-K801

1.3. List of Maintenance Supplies

Name		Specification
Fuse		A13B-0191-K101
Fan Motor		A02B-0236-K120
LCD Backlight	for 10.4" LCD type	A02B-0236-K116
Touch Panel Protection Sheet	with touch-panel and soft-key	A02B-0236-K110
	with touch-panel	A02B-0236-K130

Total Connection Diagram

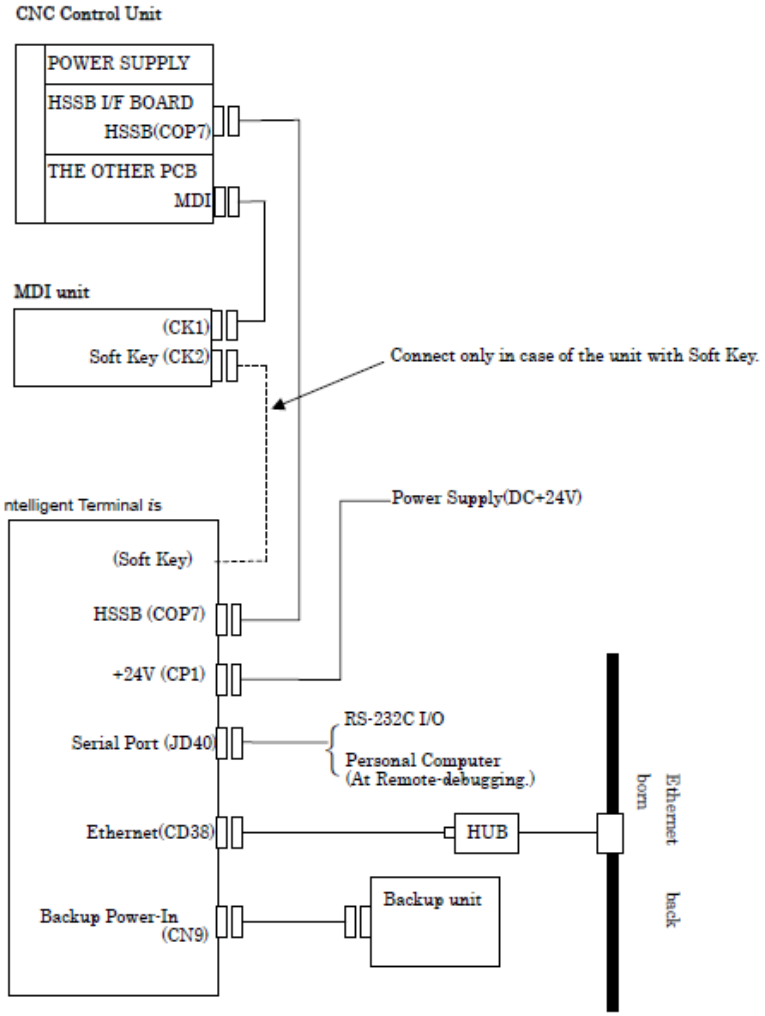

2.1. Unit connector

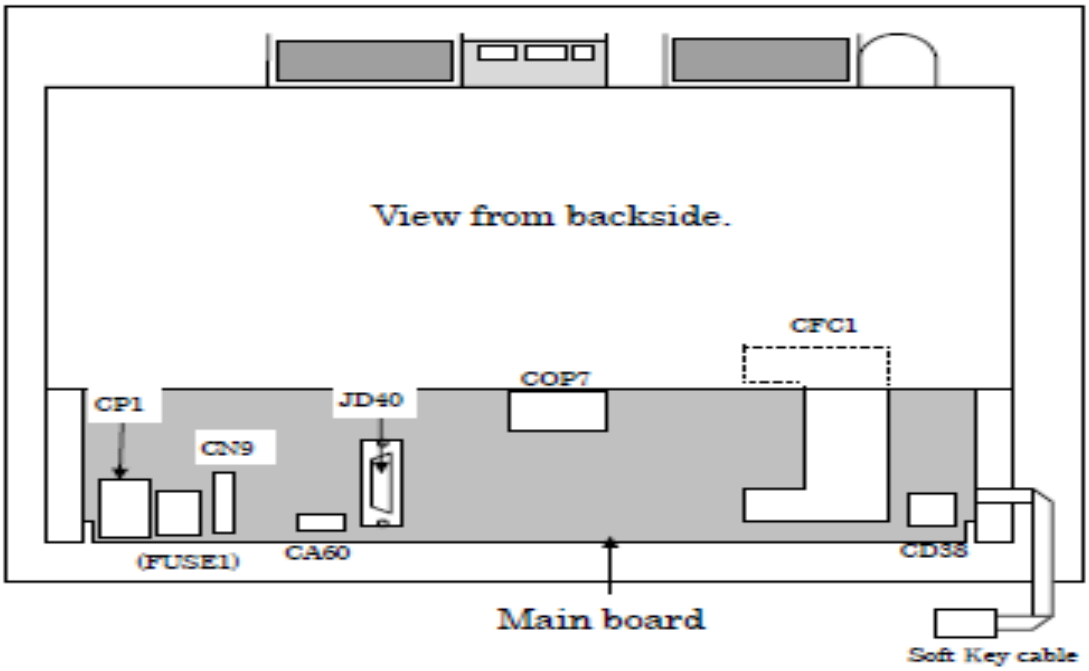

Main board Connector

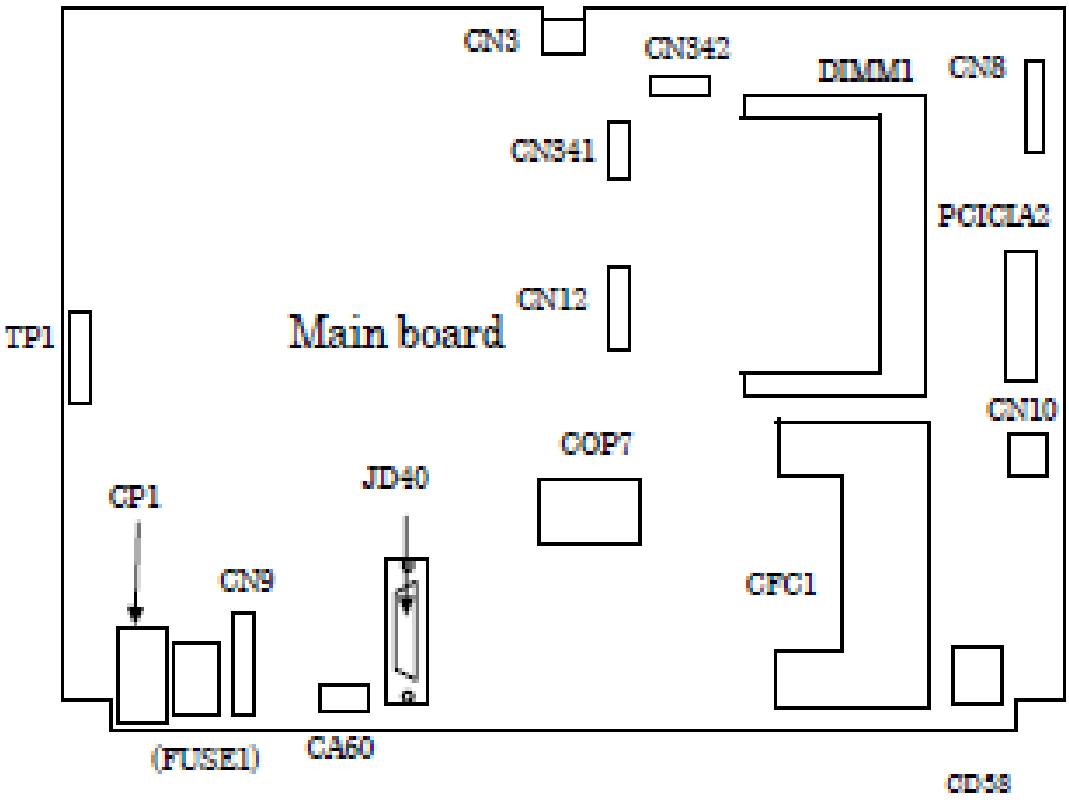

Connector name and function

Name	Function
JD40	RS232C
COP7	HSSB
CN10	Do not use
CA60	Do not use
DIMM1	for Card Engine
CN342	for Card Engine
CN341	for Card Engine
CN12	for Card Engine
CP1	DC24V-input
CD38	Ethernet(10BASE-T)
TP1	Touch Panel
CN9	Backup unit
CFC1	Compact Flash Card
CN3	Inverter
CN8	LCD panel
PCICIA2	PCMCIA

Exchange of Card Engine
Card Engine location

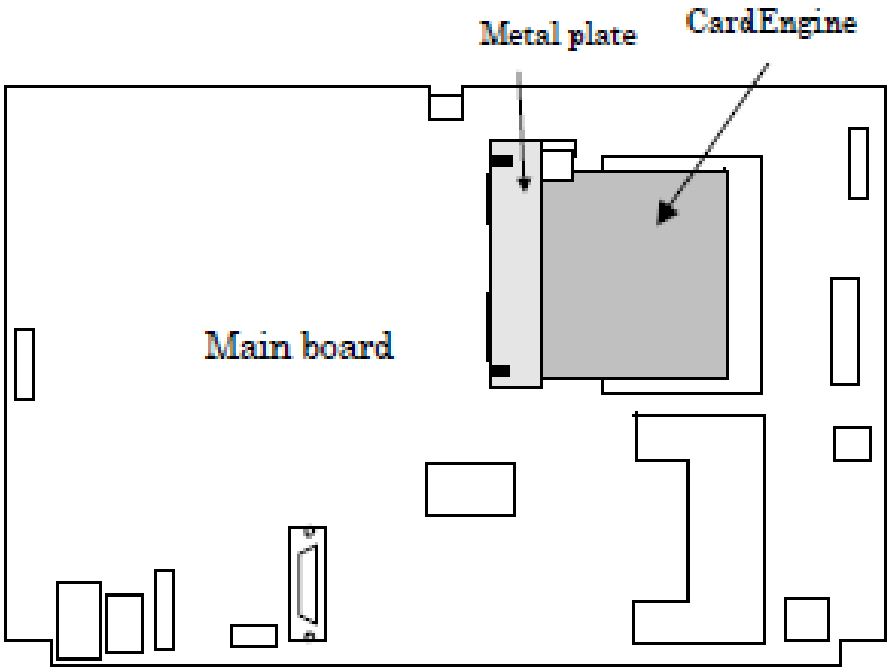

Component of Card Engine unit

Name	Spec	Quantity	Remark
Card Engine	A15L-0001-0073#16AJ	1 (Choose from these)	Japanese version
	A15L-0001-0073#16AE		English version
	A15L-0001-0069#16CJ		for ROBOSHOT
Card Mount	A98L-0005-0155/GD	1	
Metal Plate	A98L-0005-0155/MF	1	
Flat Cable	A66L-0001-0439/24	1	
	A66L-0001-0439/30	1	
	A66L-0001-0439/40	1	

Method of exchange
(1) Take off the Metal Plate that holds the flat cable connector.

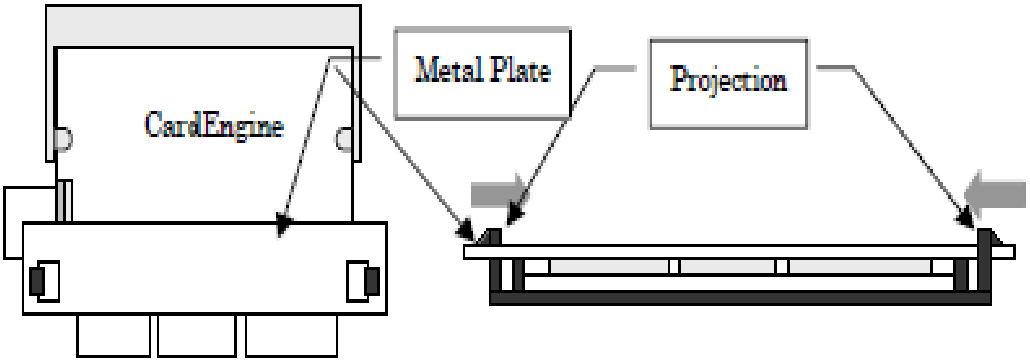

(2) Pull out 3 Flat Cables. Before pulling Flat Cables, the brown Flat Cable Stopper should be lifted.(4 Flat Cables for ROBOSHOT.)

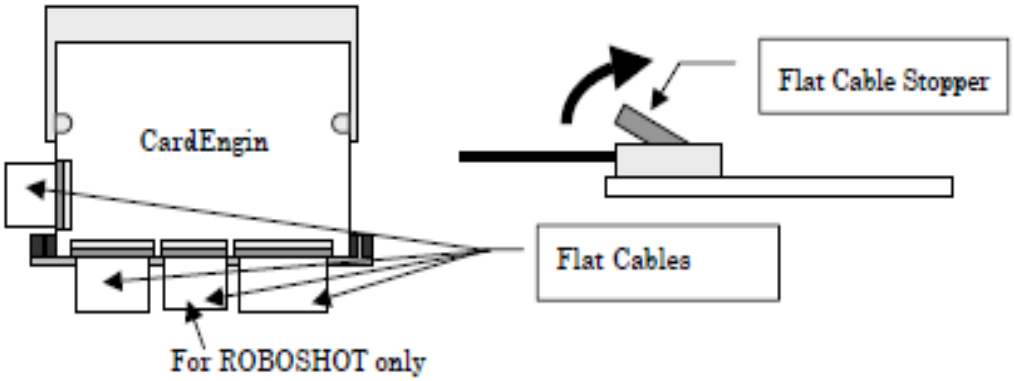

(3) Expand the white Card Engine Stopper and take off the Card Engine. The Card Engine jumps up by releasing Card Engine Stopper.

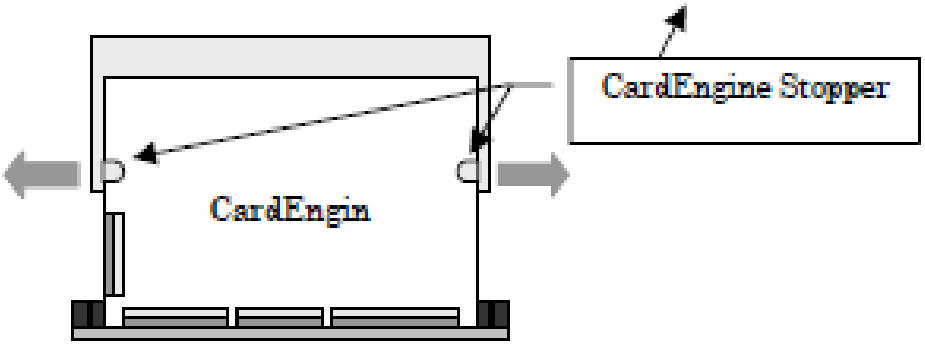

(4) Insert the new Card Engine into the Card Engine connector and fix it by the Card Engine Stopper.

(5) Insert 3 Flat Cables as they were before. (4 Flat Cables for ROBOSHOT.) At this time, make sure that all Flat Cables connected straight and fully inserted to the end of the Connectors. After that, fix them by the brown Flat Cable Stoppers.

(6) Put on the Metal Plate that holds the Flat Cable connectors.

Note:
LCD Unit for ***i***s Series CNC has a Touch Panel Protection Sheet on the face of Touch Panel to protect the Touch Panel. When the screen cannot be watched clearly because of some damages or stains, exchange the Touch Panel Protection Sheet.
Unit Specification of Touch Panel Protection Sheet

#	Unit	Specification of Touch Panel Protection Sheet
1	10.4” Display with touch panel and soft-key	A02B-0236-K110
2	10.4” Display with touch panel	A02B-0236-K130